The Italian Ship Model Basin

The Kobold marine turbine: from the testing model to the full scale prototype

Guido Calcagno

INSEAN – Italian National Institute for Naval Architecture Studies and Testing (Rome – Italy)

Alberto Moroso

Ponte di Archimede International S.p.A. – (Messina – Italy)

Tidal Energy Summit, November 28-29, 2007, London

INSEAN

The Italian Ship Model Basin

Presentation of INSEAN

- Established in 1927, in Rome as a navy ship model testing facility
- Today, among largest European Research Center on naval architecture

- The mission:

✓ conduct research in several fields of marine hydrodynamics

✓ provide consultancy to national and international shipbuilders and shipowners (naval and civil applications)

✓ promote cooperation with other organizations

The Italian Ship Model Basin

INSEAN figures

- 150 employees, academic staff of 50 people
- 7 scientific & technical departments
- World-class facilities (2 towing tanks, a circulating water channel)
- Two-decades experience in developing computational models
- Expertise covering traditional as well as new fields:

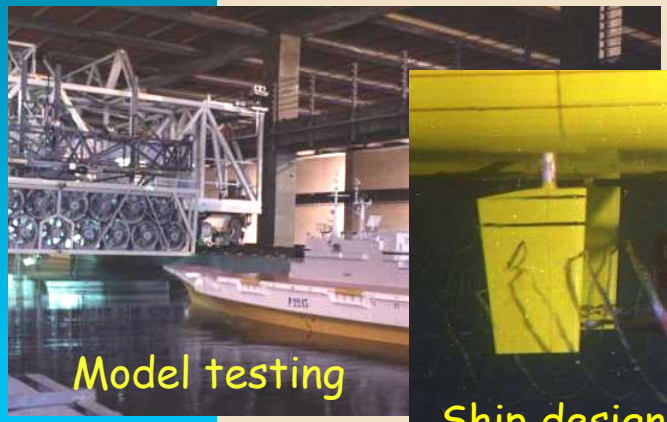

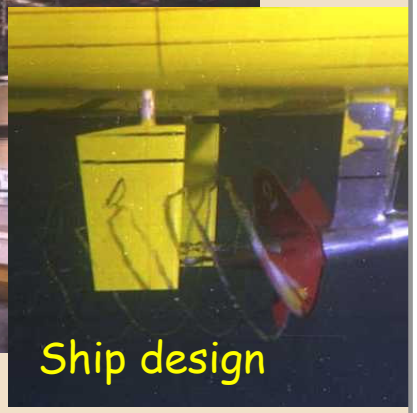

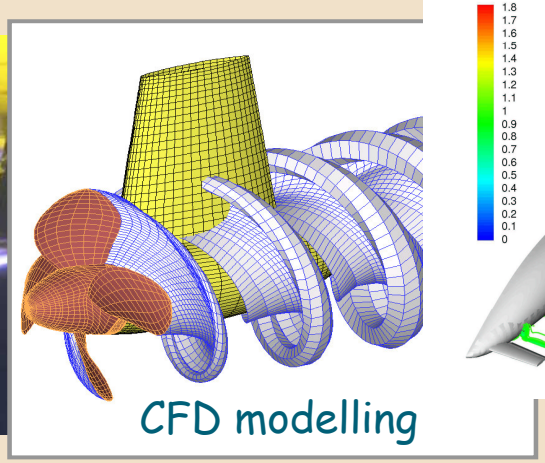

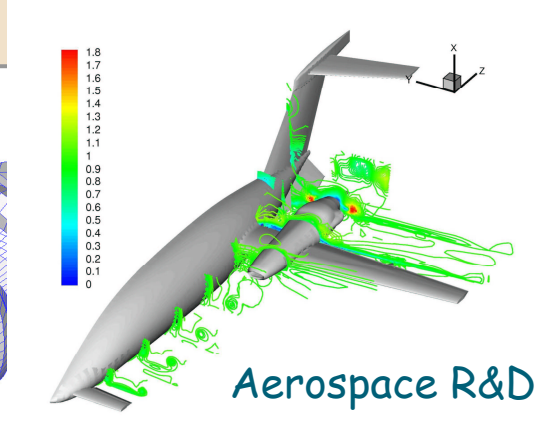

The Italian Ship Model Basin

INSEAN and tidal energy research

- Research cooperation with Ponte di Archimede S.p.A., an Italian company involved in innovation in engineering infrastructure and in the energy sector

- INSEAN has great experience and knowledge in numerical modelling and testing of marine propellers and turbine

- INSEAN activity on turbine hydrodynamics: understanding power generation mechanism

- Starting of a Research Group on marine current renewable energy exploitation

- Involved in experimental research as well as in modelling and numerical simulation

INSCAN

The Italian Ship Model Basin

The Kobold concept (1)

The *Kobold* is a hydraulic vertical axis turbine with free oscillating blades, patented in 1998 by the Italian company Ponte di Archimede International S.p.A.

The architecture of the *Kobold* turbine was inspired by the Voith-Schneider marine propellers

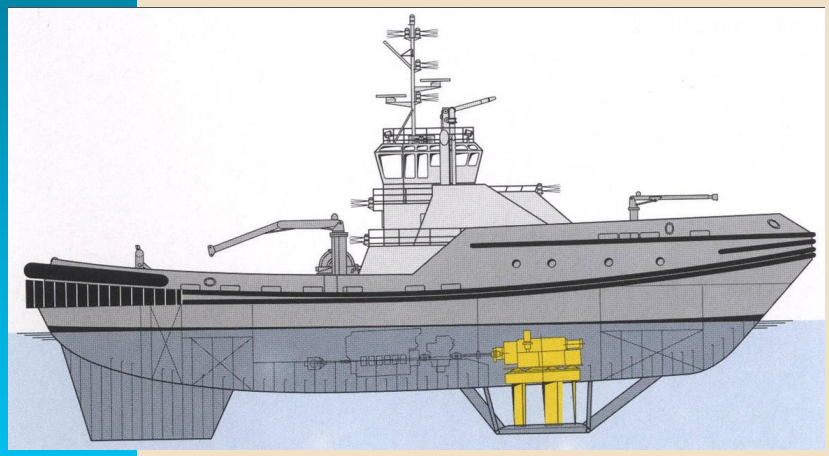

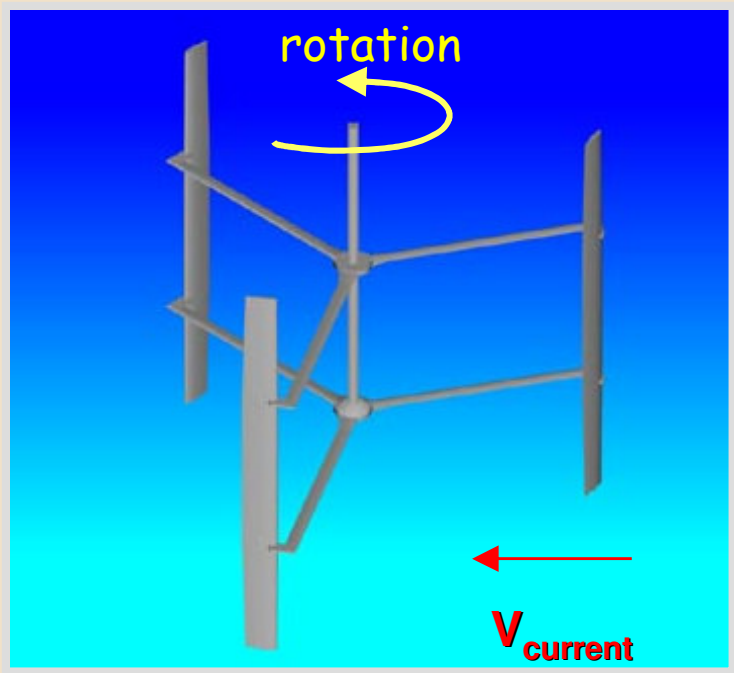

The Kobold concept (2)

Its main characteristics are:

- Rotation direction independent of current direction.
- High starting torque, thus self starting.
- Flexible layout: floating or base-mounted
- High efficiency.
- Reliable, sturdy and simple.
- Self adjusting blades.
- No moving mechanisms.

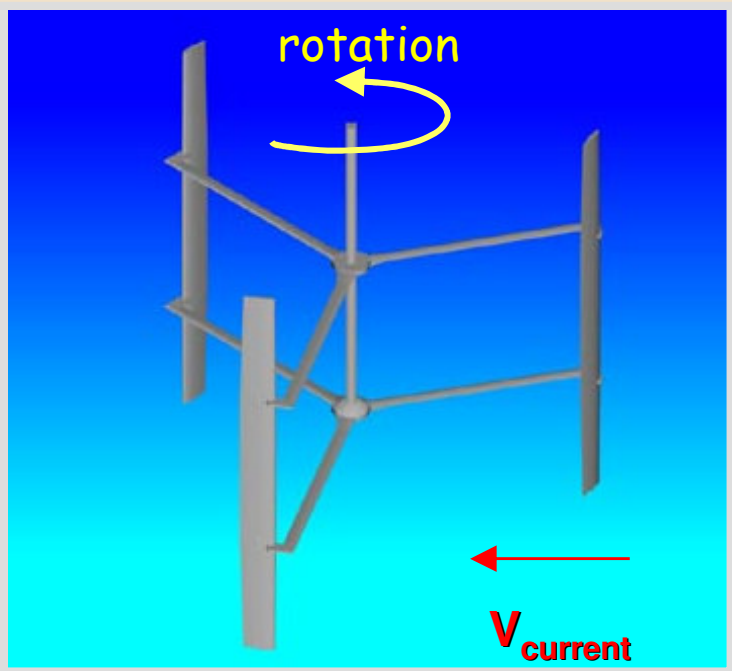

INSEAN

The Italian Ship Model Basin

Research on the Kobold concept

- In 1995 Ponte di Archimede began the study of a new turbine which had to be simple, reliable, economic and, above all, have a high efficiency
- An intense experimental phase begun at University of Naples "Federico II" with both tests in towing tank and in wind tunnel.
- INSEAN has been involved in order to extend the research also through Computational Fluid Dynamics models and validating experiments in large experimental facilities

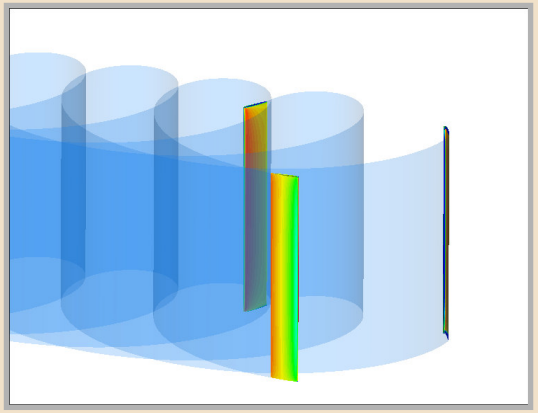

INSEAN

The Italian Ship Model Basin

PONTE DI ARCHIMEDE NELLO STRETTO DI MESSINA S.p.A.

Aims of experiments on a scaled model

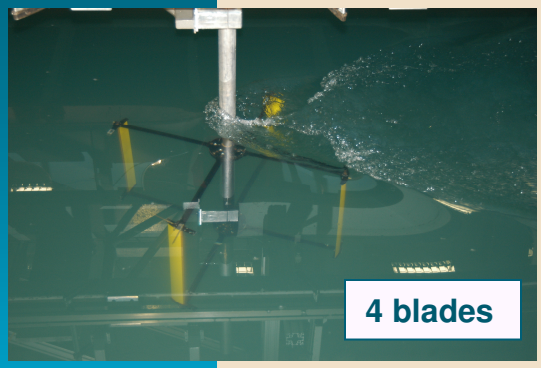

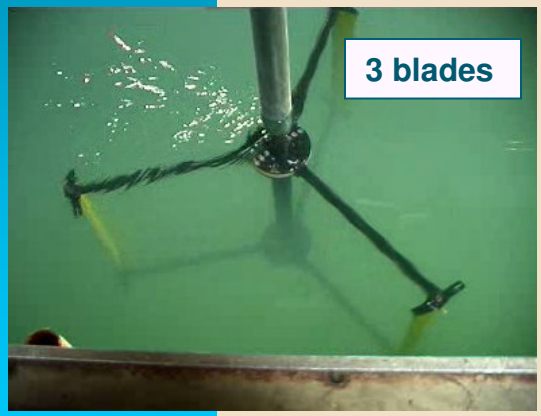

- qualitative/quantitative observation of the turbine working conditions, can help designers to acquire a **better understanding of hydrodynamics** involved in the Kobold technology and of the whole turbine mechanical behaviour.
- a useful **data-base for comparison** with both the full-scale data set and with the numerical modelling results
- Data for the **configuration optimization**; three or four bladed; best angle oscillation range, optimal advance coefficient
- gaining greater confidence with this kind of **experimental set-up and testing model** (future experimental activities on tidal energy technologies)

tidaltoday

INSEAN

The Italian Ship Model Basin

Model details

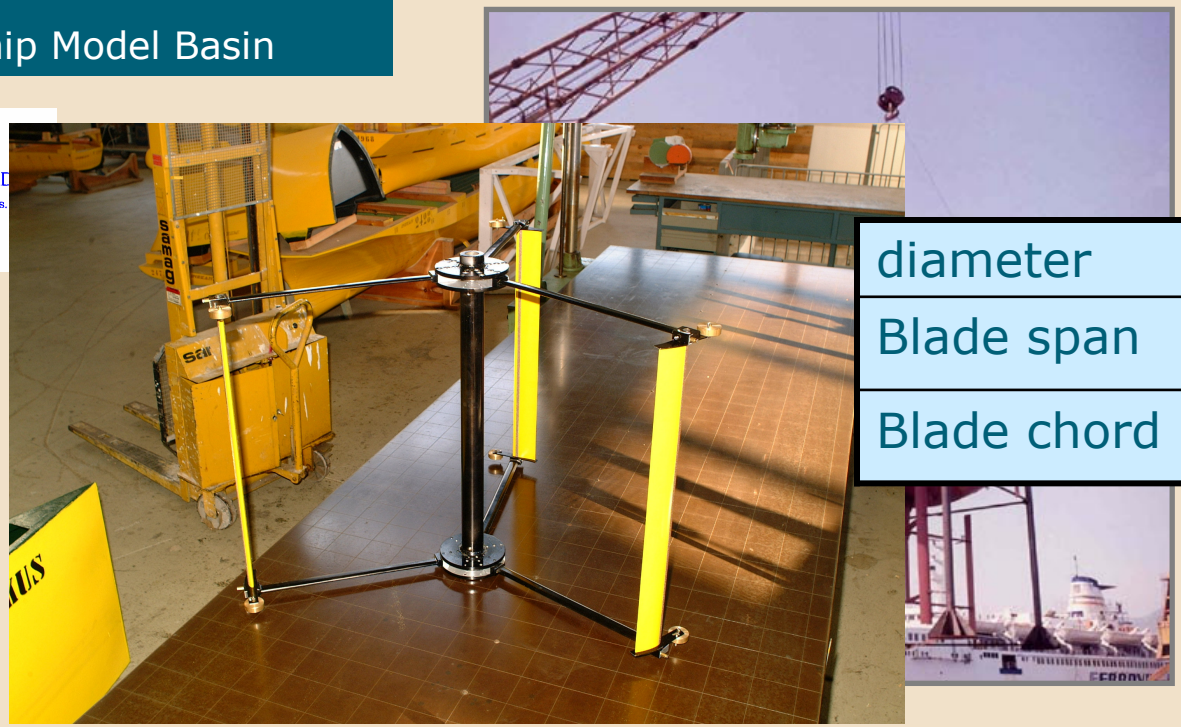

diameter	120 cm
Blade span	100 cm
Blade chord	8.0 cm

- Model scale 1:5 of the prototype
- the model consists only of the vertical-axis turbine without the floating buoy
- Measured data: rotational speed, delivered torque and power
- The model turbine is towed along the tank to simulate an incoming flow

The Italian Ship Model Basin

Experimental set-up

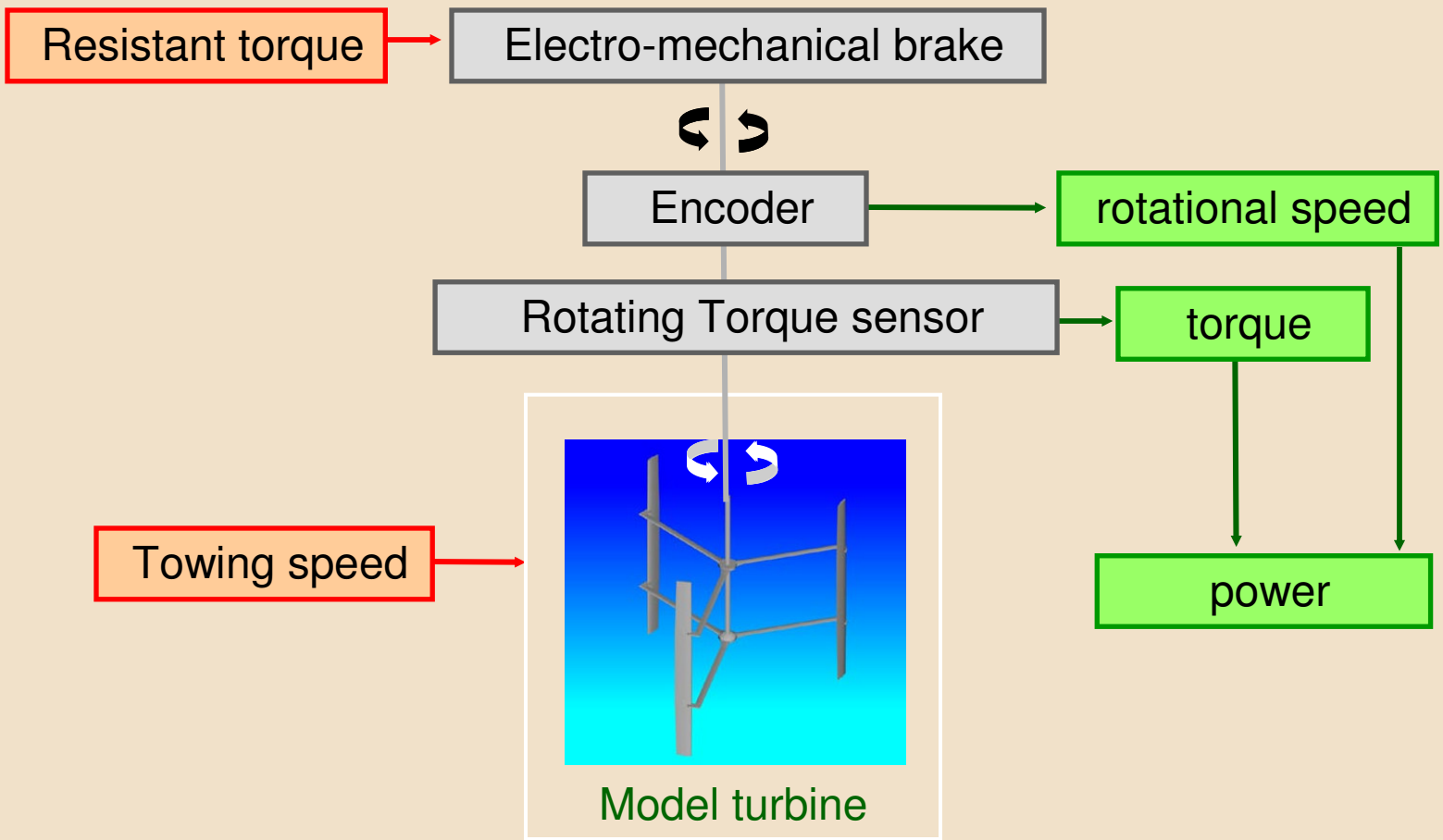

INSEAN

The Italian Ship Model Basin

PONTE DI ARCHIMEDE NELLO STRETTO DI MESSINA S.p.A.

Experimental results

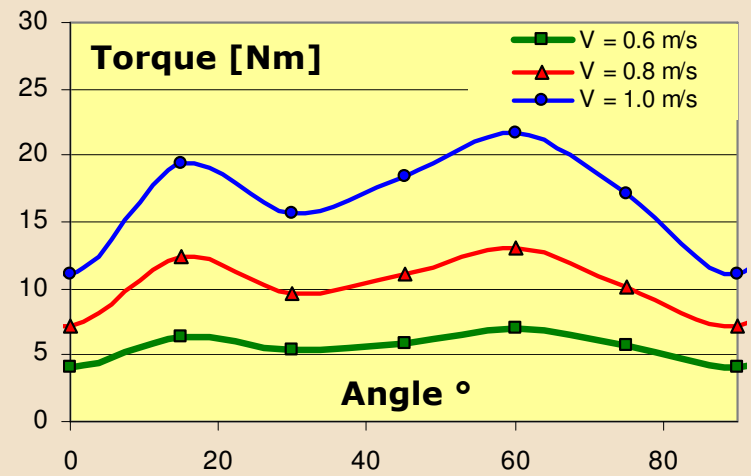

- Excellent starting torques confirmed (self starting turbine)
- The blade oscillation was confined in a sector between two angles.

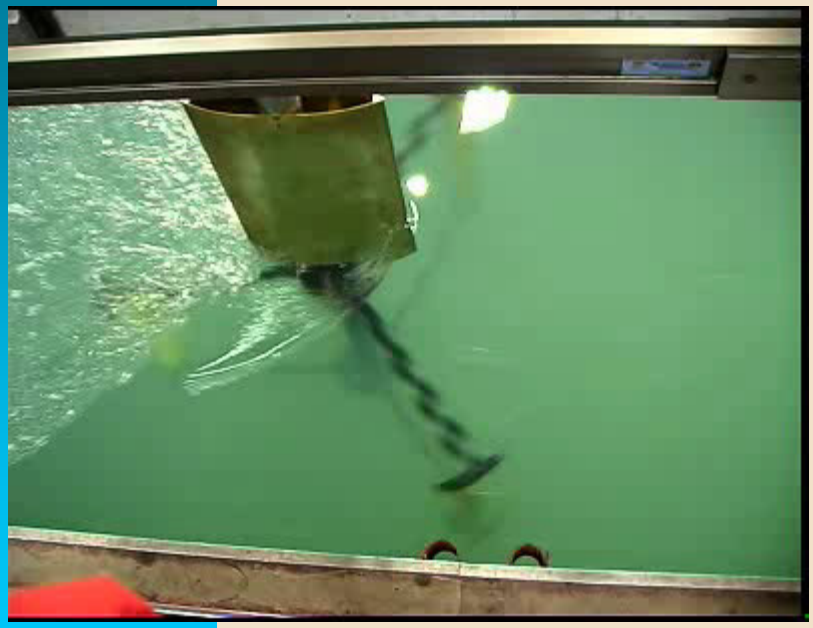

- Blade dynamic stall has been observed
- slight improvement passing from three to four blades (wake's perturbation hydrodynamic negative interference
- significant improvement adopting free-oscillation blocks at (0°,+10°) compared with the (−10°,+10°) option both for the three and the four-bladed turbine
- maximum delivered mechanical power for an advance coefficient between 1 and 1.5

tidaltoday

Modelling the physics

Predict vertical-axis turbine performance: a challenge for theoreticists!

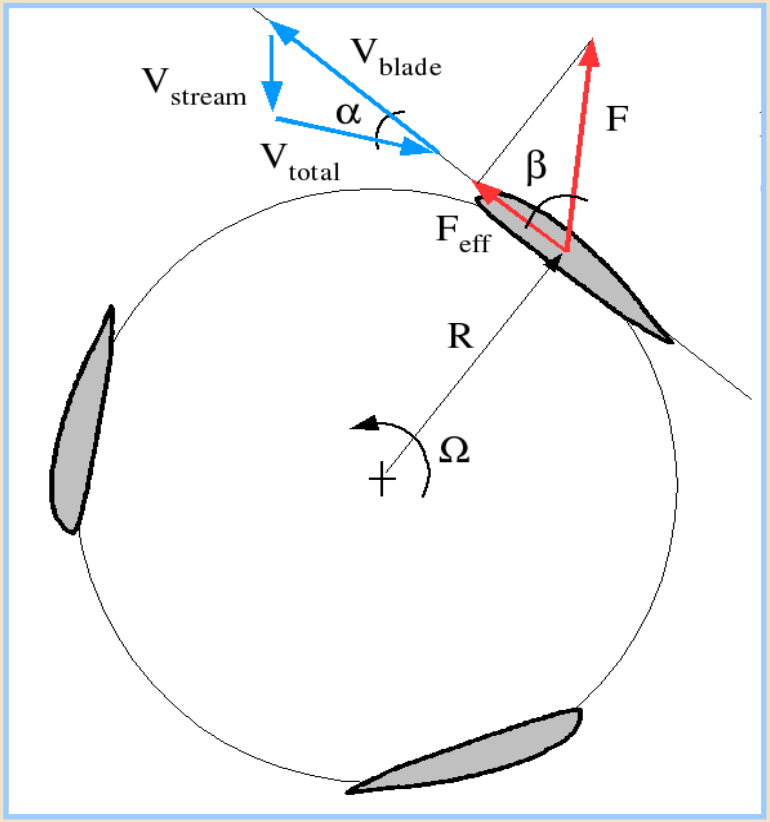

Horizontal section of 3-bladed rotor

- Unsteady flow
- Rotational speed unknown
- Cavitation
- Viscous, turbulent flow
- Stall
- Blade-to-blade effects
- Non-uniform inflow

Critical issues

Blade working conditions: time history of blade angle of attack over a rotor revolution

Wake impingment

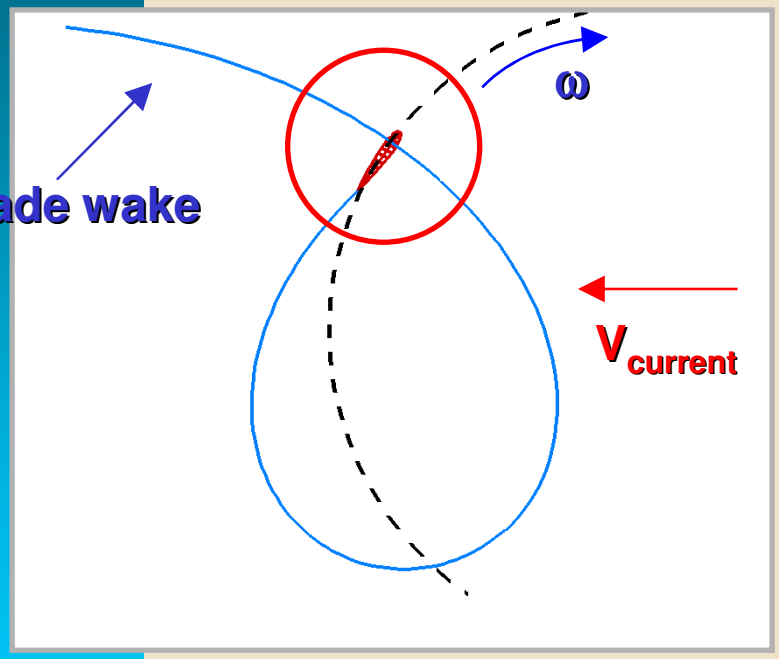

Wake-to-blade interaction

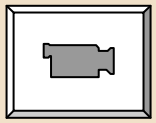

High angle of attack (stall, dynamic?)

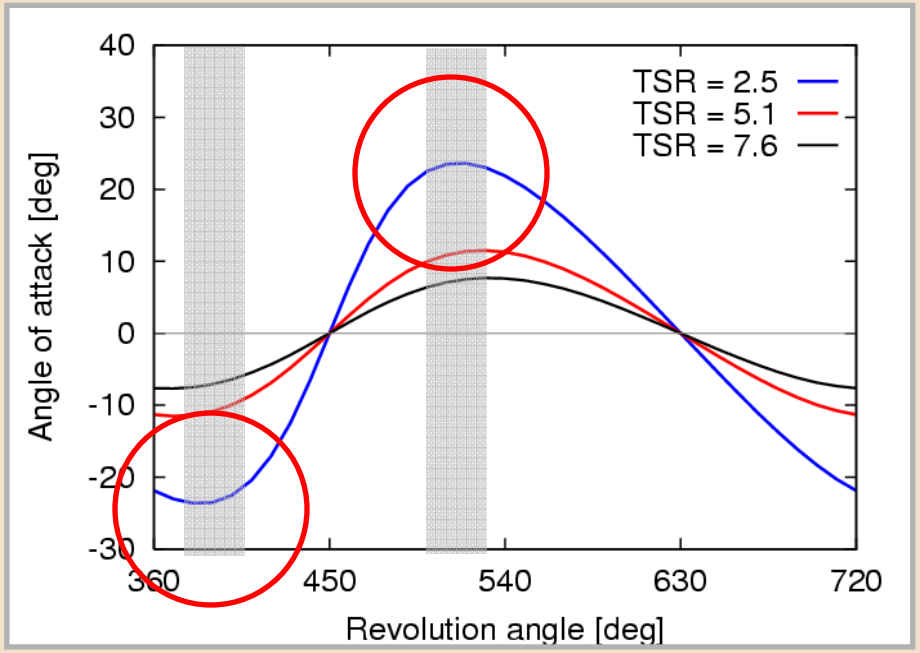

Suspected regions of stall at Tip-to-wind speed ratio TSR = 2.5 (from Strickland, 1983)

$$TSR = \frac{\text{Rotational speed}}{\text{Current speed}}$$

Present hydrodynamics approach

- Emphasis on preliminary design:
  - ✓ Characterization of the unsteady flow features affecting turbine performances
  - ✓ Efficient tools allowing parametric analyses
  - ✓ Turbine optimization and site customization
- Proposed approach:
  - ✓ Boundary Element Methodology (BEM) for unsteady inviscid flows
  - ✓ Well-established method for air & sea craft flow modelling
  - ✓ Extensive applications at INSEAN on marine propulsion studies
- Specific enhancements required for vertical axis turbines analysis:
  - ✓ Unsteady trailing wake alignment technique
  - ✓ Wake-to-blade interaction model
  - ✓ Viscous and dynamic stall effects

From single to multi blade

Potential Flow (BEM) analysis for multi-bladed rotors:

- ✓ 3D unsteady simulations of real-life working conditions
- ✓ Blade-to-blade and blade-to-wake interactions are considered
- ✓ Flow alignment technique to determine actual shape of the trailing wakes

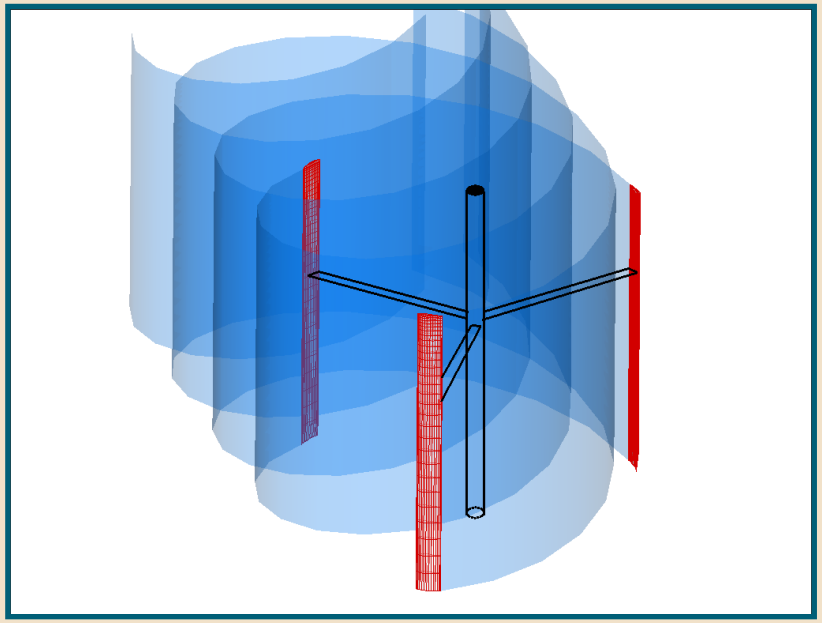

The Italian Ship Model Basin

Fully 3D modelling

Idealized turbine: only the active components generating torque are considered (the blades)

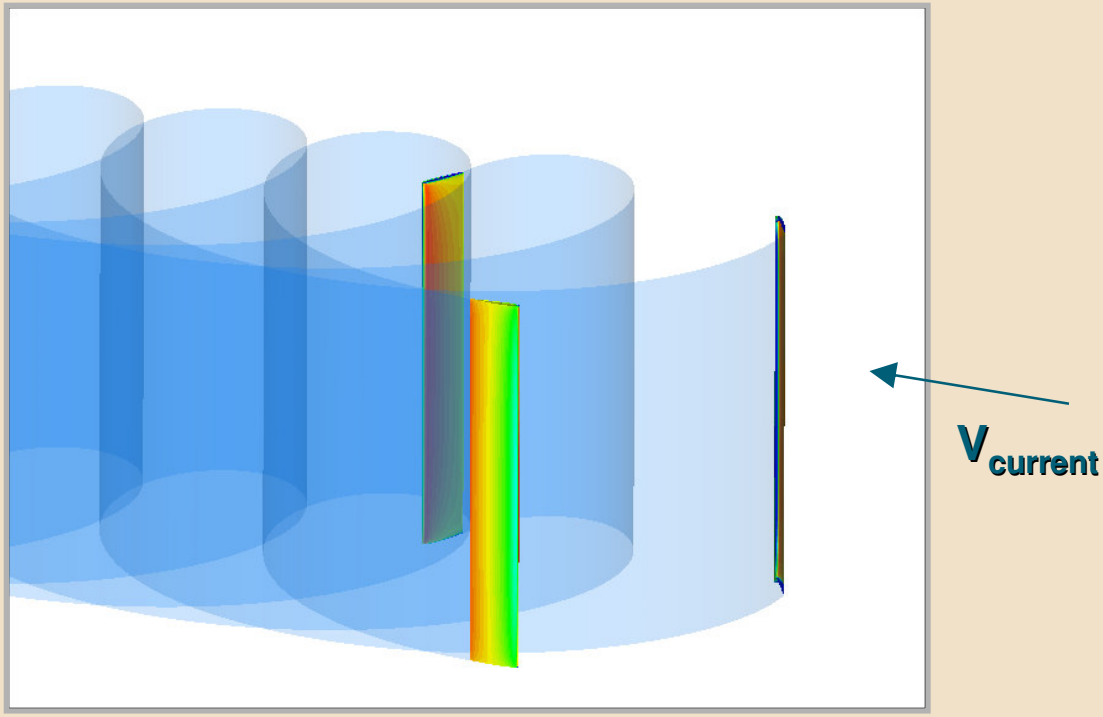

Unsteady pressure distribution on a three-bladed rotor

The Italian Ship Model Basin

Inclusion of viscous flow corrections

- Simulation by BEM: inviscid contributions to blade loads
- Experimental data (lift and drag coefficients) for 2D, steady airfoils over a wide range of blade angle of attack and Reynolds numbers (blue)
- Single blade polar curve evaluated by steady 3D BEM simulation (red)

Viscous corrections included by a quasi-steady approximation

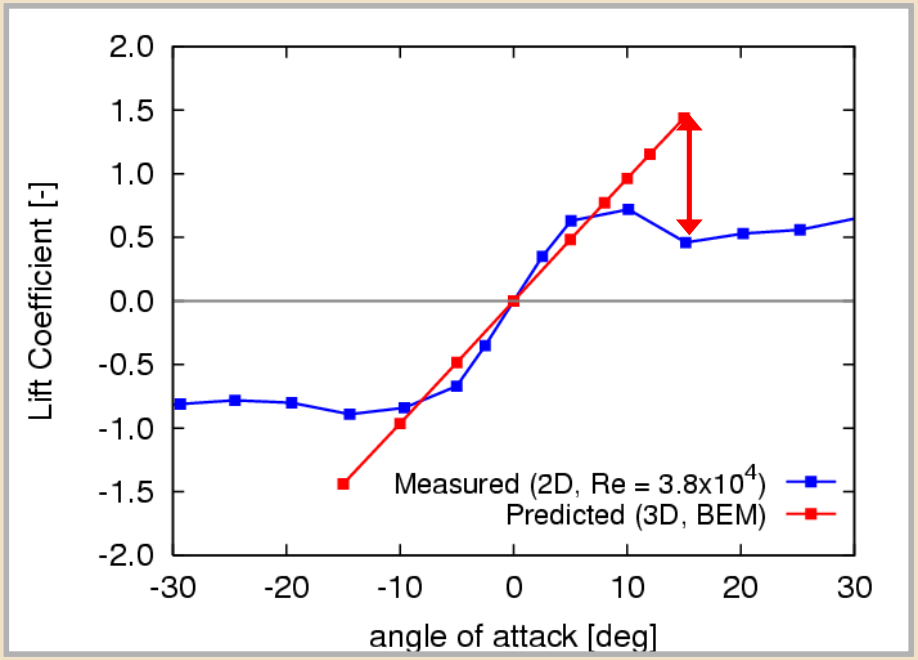

INSEAN

The Italian Ship Model Basin

PONTE DI ARCHIMEDE
NELLO STRETTO DI MESSINA S.p.A.

from the testing model (physical and numerical) ....

..... to the full scale prototype

tidaltoday

Tidal Energy Summit, November 28-29, 2007, London

The Enermar pilot plant (1)

- The Enermar pilot plant was launched in 2001 in the Strait of Messina, financed by Ponte di Archimede S.p.A., the Sicilian Government and the European Union.

- The installation site is 150 offshore near Messina, by the Sicilian coast, where the average speed of the tidal current is between 1.5 e 2 m/s, although there are points, in the Strait of Messina, where the velocity peaks can reach more than 3 m/s.
- The KOBOLD turbine is one of the first marine current turbine to be connected to a national electricity grid

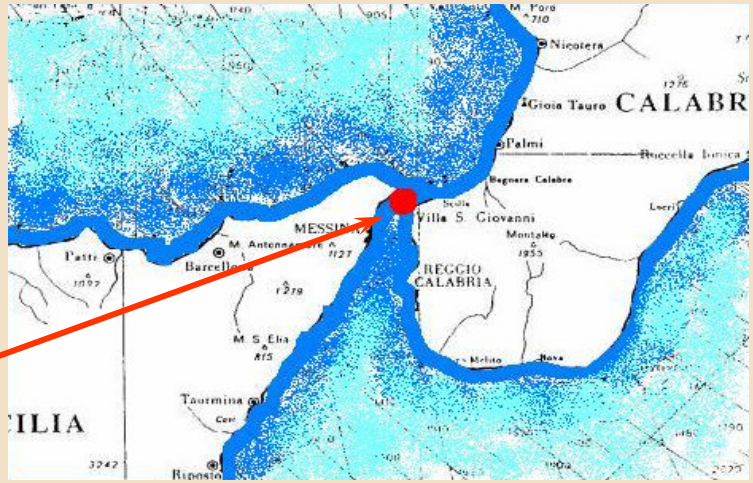

INSEAN

The Italian Ship Model Basin

The Enermar pilot plant (2)

FLOATING PLATFORM	
Diameter	*10 m*
Depth	*2.5 m*
Displacement	*35 t*
Mooring blocks	*4 (35 t each)*
Blocks material	*Concrete*

TURBINE	
Rotor diameter	*6.0 m*
Blades height	*5.0 m*
Chord	*0.4 m*
Blades number	*3*
Blades material	*Carbon Fibre*

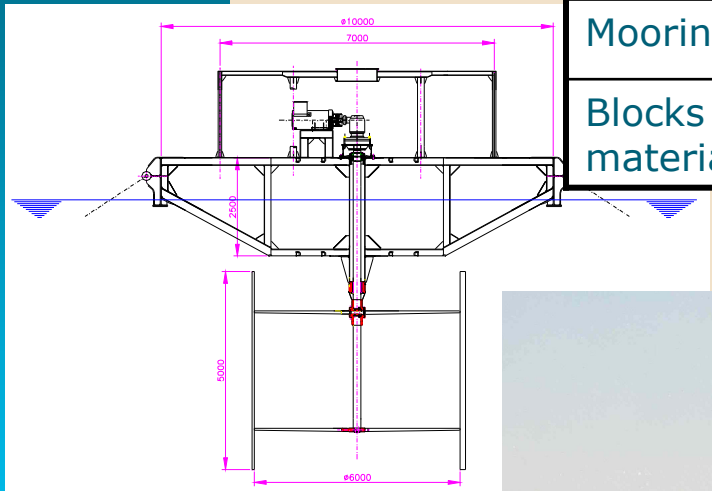

At 2 m/s the power produced is about 25 – 30 kW

Turbine revolutions = 18 rpm

INSCAN

The Italian Ship Model Basin

The Enermar pilot plant (3)

PONTE DI ARCHIMEDE NELLO STRETTO DI MESSINA S.p.A.

Starting from 2004 UNIDO finalized a project aiming at promoting and disseminating in selected developing countries the use and application of the Kobold turbine.

United Nations Industrial Development Organization

UNIDO

The next step is to provide renewable energy to the remote islands of the People's Republic of China, Indonesia and the Philippines, together with the local governments and UNIDO.

tidaltoday

INSEAN

The Italian Ship Model Basin

Blade details

- Due to stresses and mass problems, the blades are made in carbon fiber and epoxy resin.

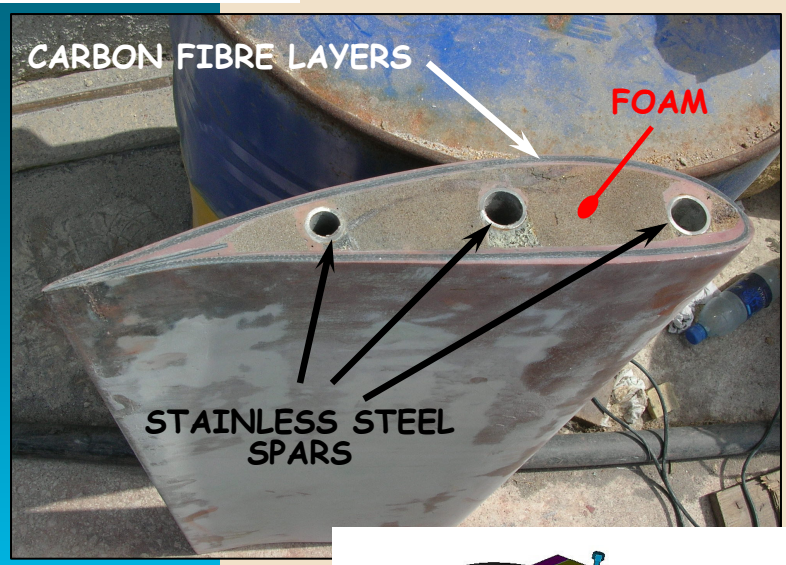

- The inner structure is in a very light closed-cell foam, there also are 3 stainless steel (AISI 316) spars for the whole lenght of the blade and ribs every 500 mm.

- Arm-blade connection: rubber blocks and counter-weights

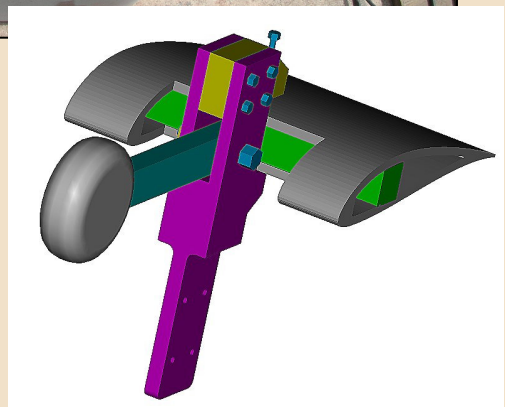

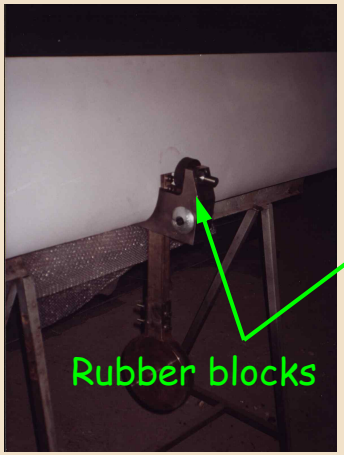

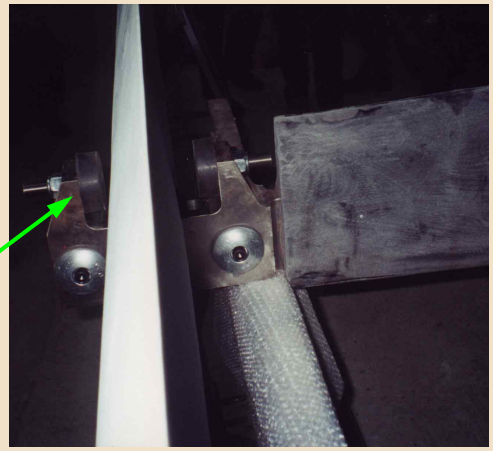

Platform details

- The turbine generates a thrust while working, which approximately has the same direction of the current.
- In standard working conditions this thrust is about 10 t.

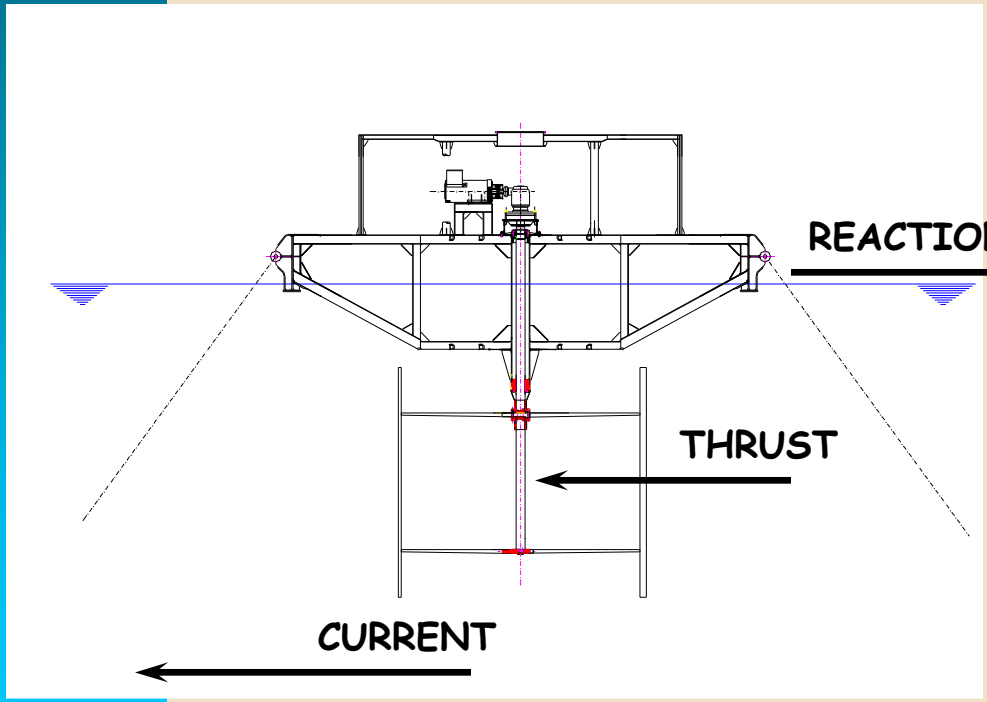

Platform details

- The turbine generates a thrust while working, which approximately has the same direction of the current.
- In standard working conditions this thrust is about 10 t.

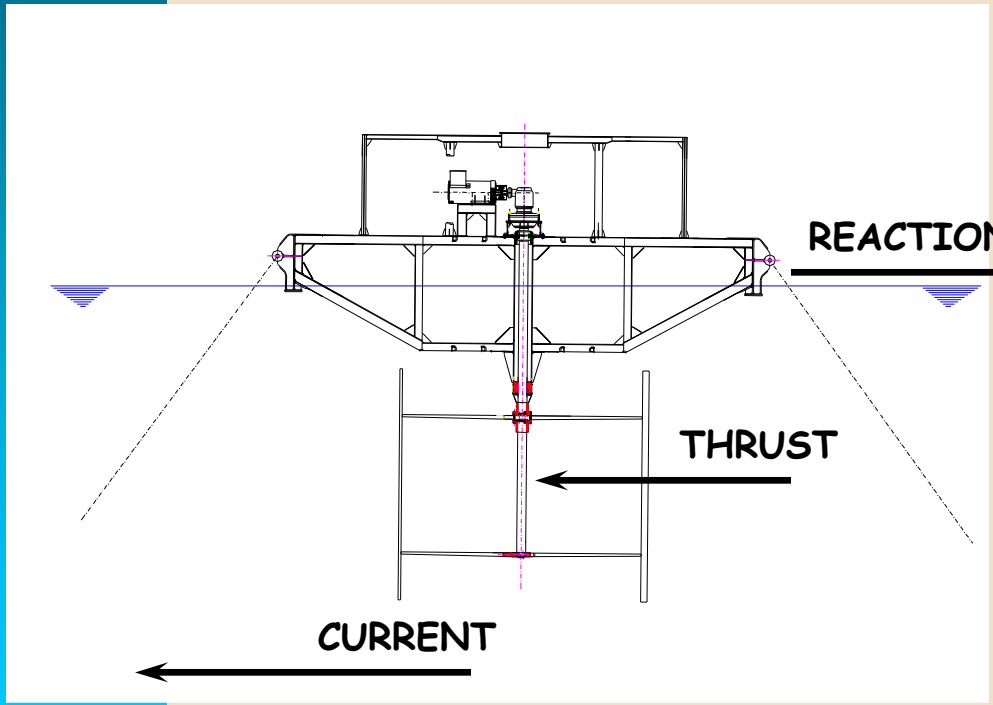

Platform details

- The turbine generates a thrust while working, which approximately has the same direction of the current.
- In standard working conditions this thrust is about 10 t.

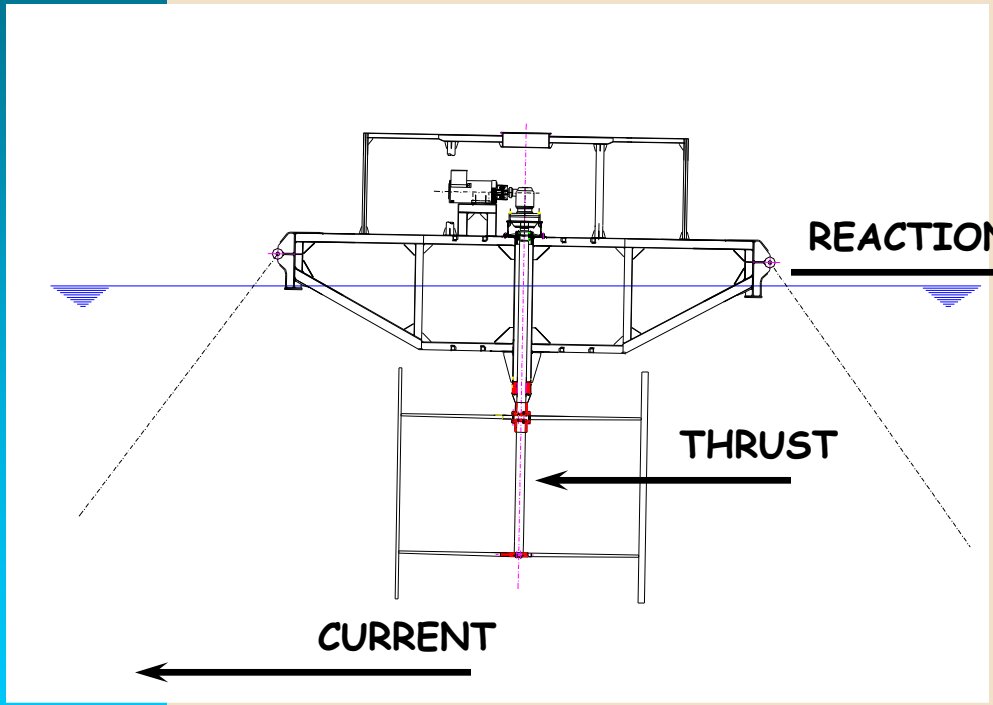

Platform details

- The turbine generates a thrust while working, which approximately has the same direction of the current.
- In standard working conditions this thrust is about 10 t.

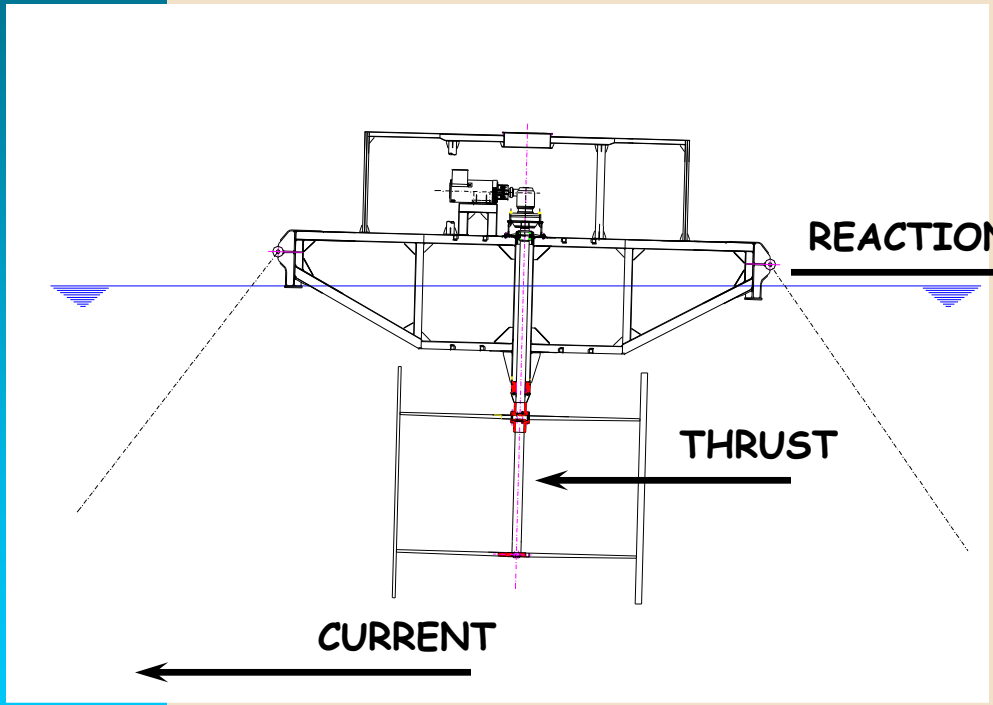

Platform details

- The turbine generates a thrust while working, which approximately has the same direction of the current.
- In standard working conditions this thrust is about 10 t.

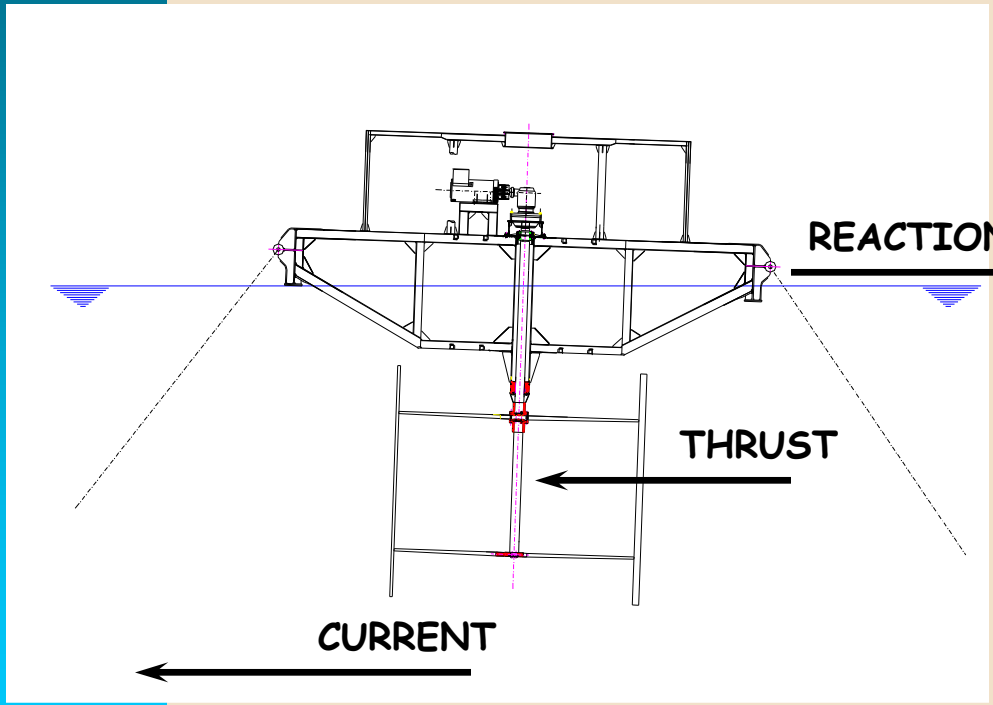

Platform details

- The turbine generates a thrust while working, which approximately has the same direction of the current.
- In standard working conditions this thrust is about 10 t.

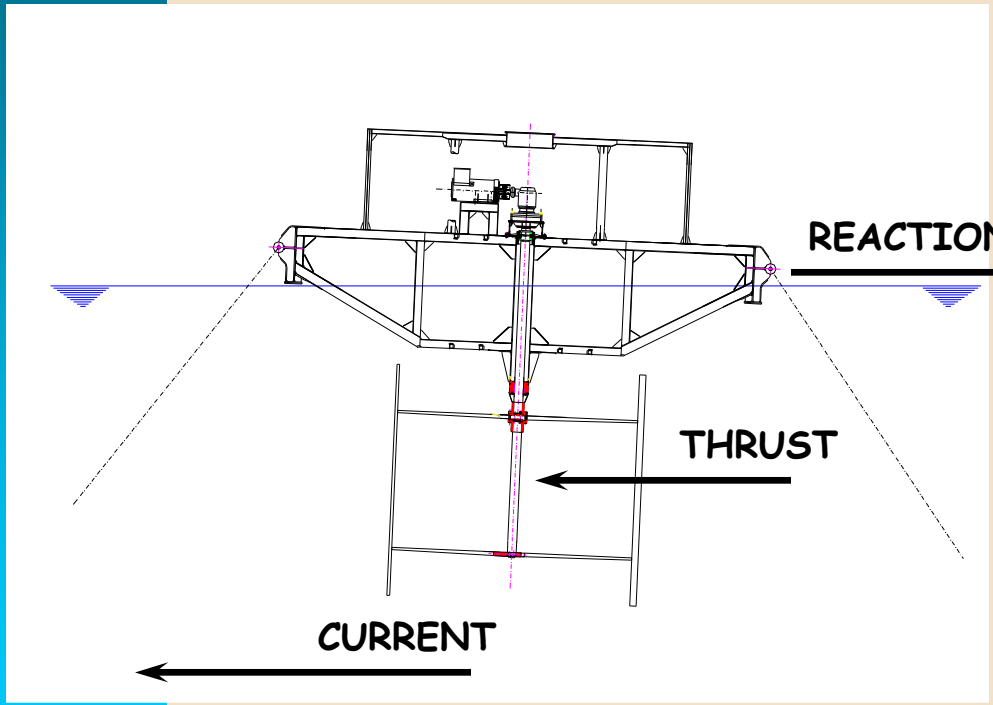

Platform details

- The turbine generates a thrust while working, which approximately has the same direction of the current.
- In standard working conditions this thrust is about 10 t.

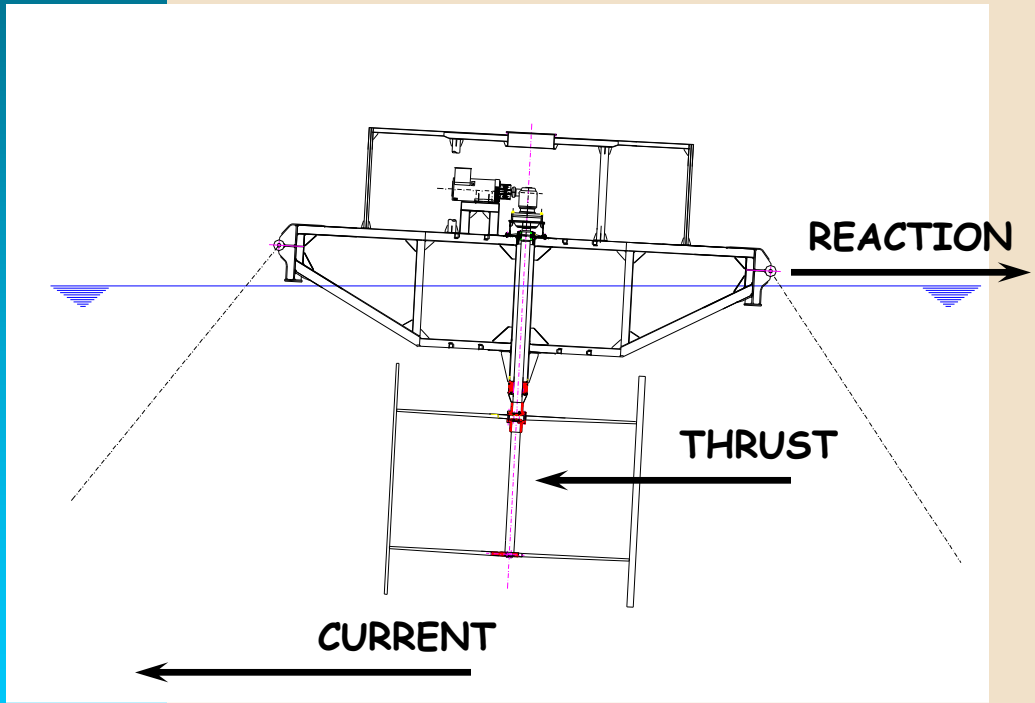

Platform details

- The turbine generates a thrust while working, which approximately has the same direction of the current.
- In standard working conditions this thrust is about 10 t.

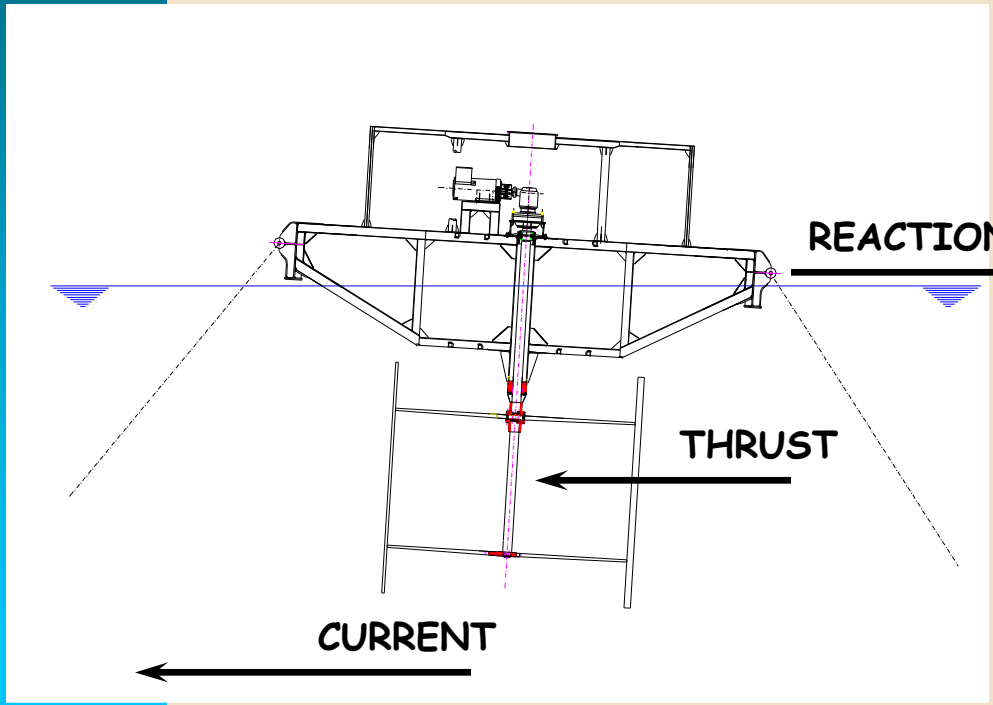

Platform details

- The turbine generates a thrust while working, which approximately has the same direction of the current.
- In standard working conditions this thrust is about 10 t.

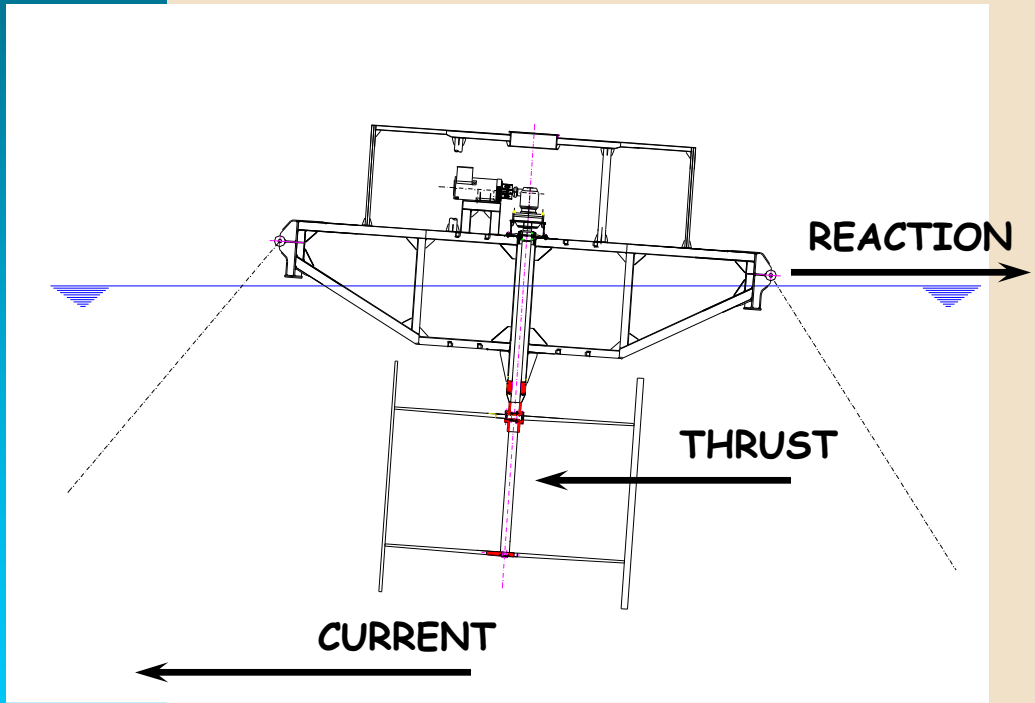

Platform details

- The turbine generates a thrust while working, which approximately has the same direction of the current.
- In standard working conditions this thrust is about 10 t.

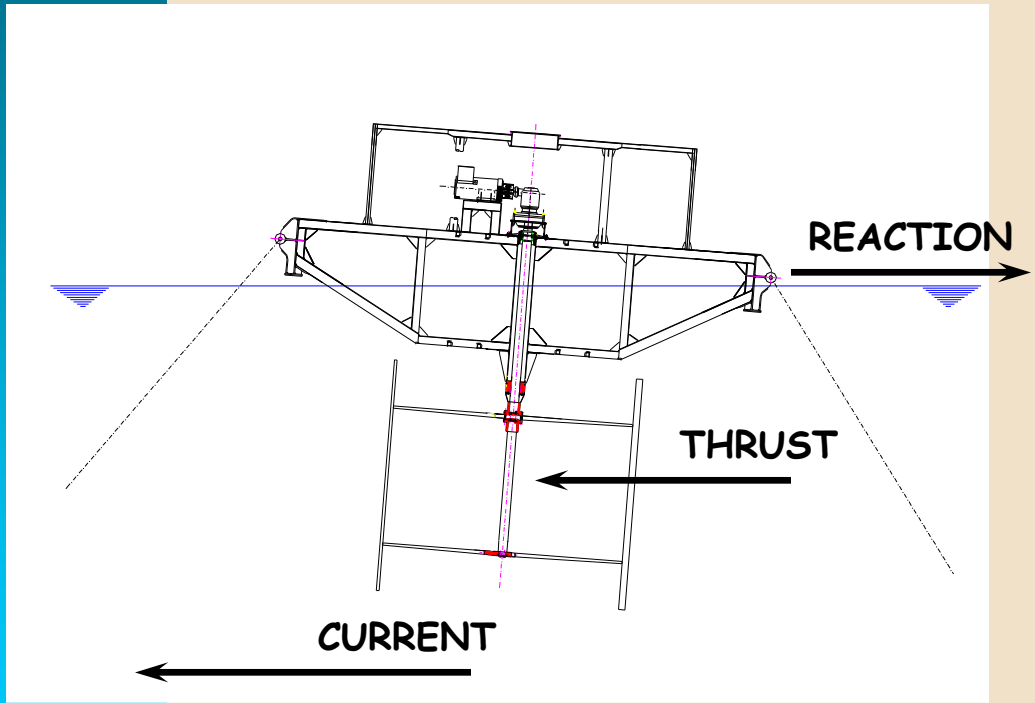

Platform details

- The turbine generates a thrust while working, which approximately has the same direction of the current.
- In standard working conditions this thrust is about 10 t.

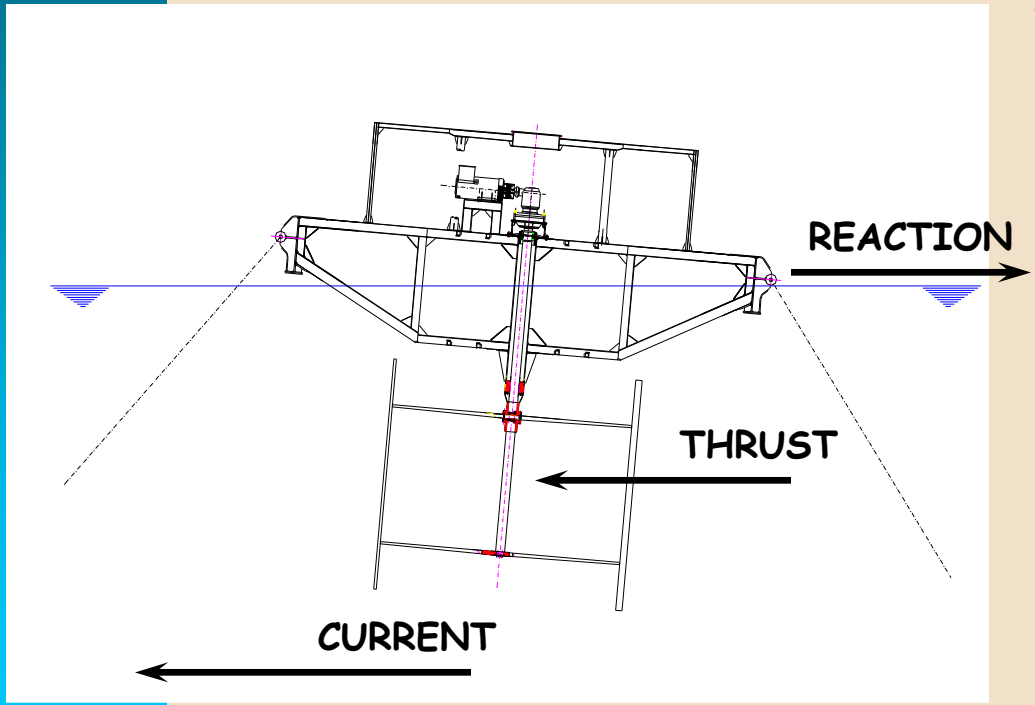

Actually, during the normal operational conditions this inclination is about 5 – 6°.

It is not advisable to have a bigger trim mainly for two reasons:

- It is difficult to work on board.
- The arms fairings produce an added resistance and can stall.

The Italian Ship Model Basin

Mooring details

- The Kobold floating platform is anchored to the sea bed by means of four mooring lines disposed at 90° from one another.

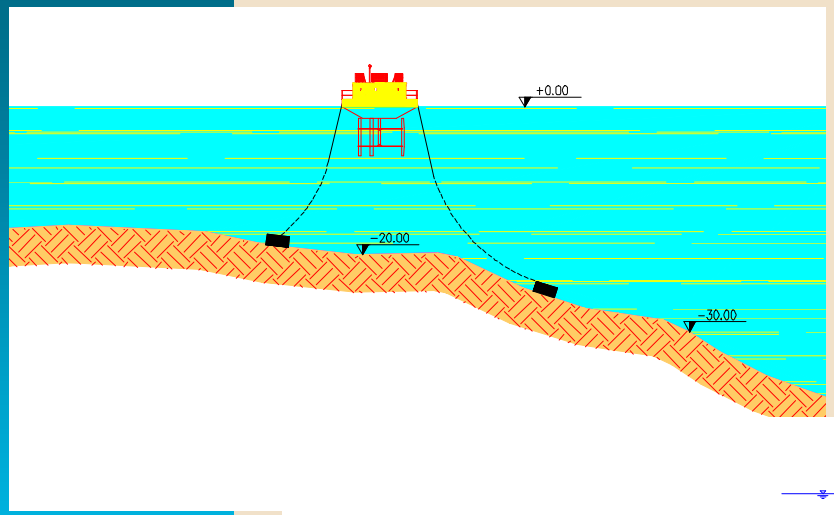

- The platform is positioned 150 m offshore and moored to the seabed with depths going from 18 m to 35 m.

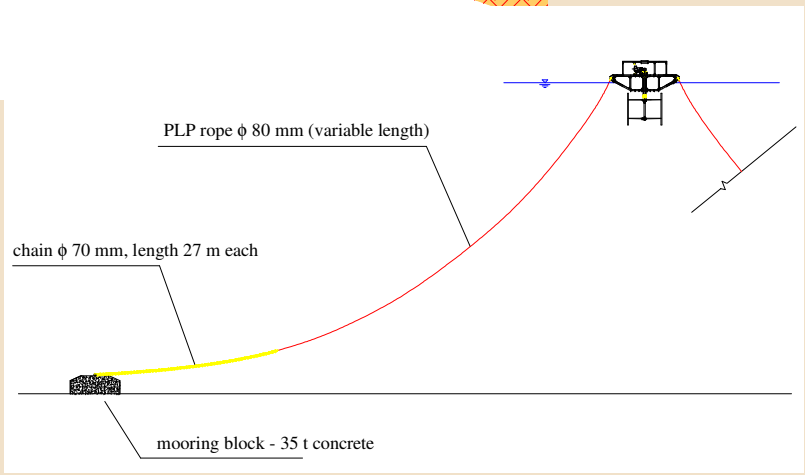

- Each mooring line is composed by a concrete mooring block, by a chain and by a textile rope attached to the mooring eyebolts of the platform.

The Italian Ship Model Basin

Open sea tests

- Tests were carried out in a range of current velocity between 1 and 2 m/s.
- At 2 m/s the power produced was about 25 kW (the design power is 80 kW).
- The global net efficiency, defined as : $\eta = \frac{ElectricPower}{\frac{1}{2}\rho S V^3}$

  Including electric and mechanical losses, was estimated in about 25%.

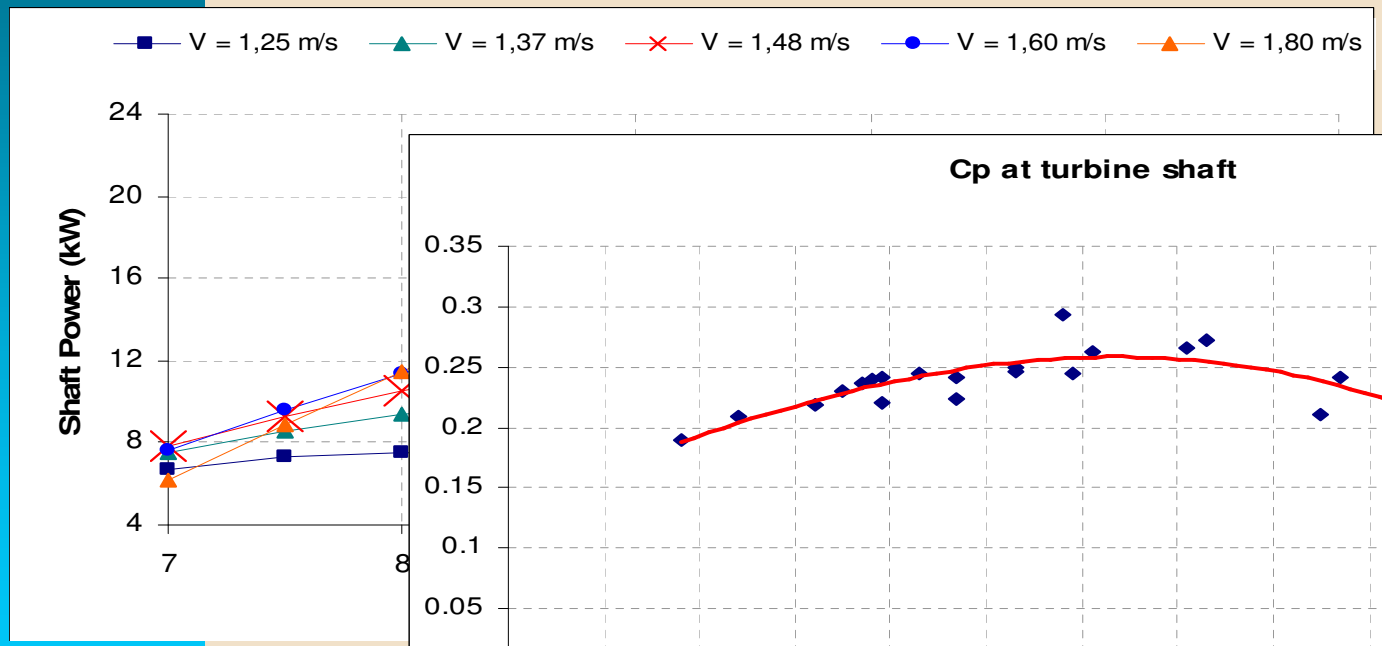

The Italian Ship Model Basin

Electrical details

- In the first phase the energy was used on board for experimental purposes, giving power to 1 kW floodlights and to a 6 kW "fire-fighting" pump.

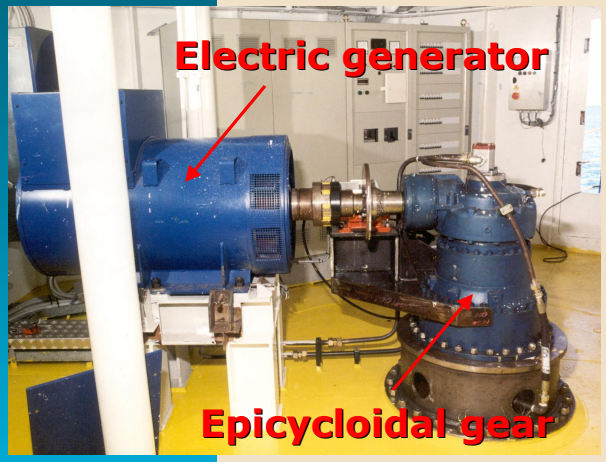

- In 2005 the plant was connected to the electric grid by means of a submarine cable. All the inner electrical components were optimized in order to meet the grid requirements.

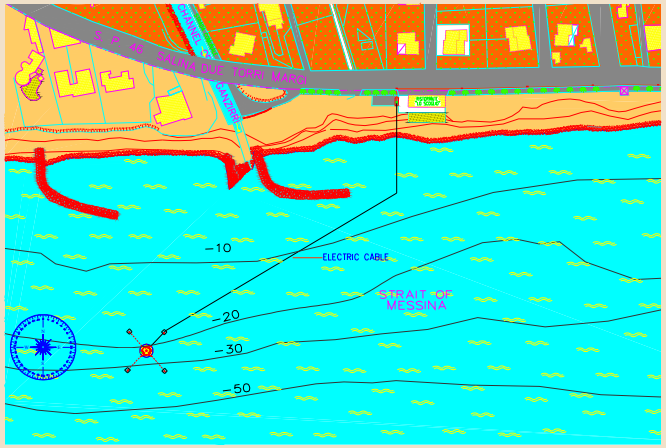

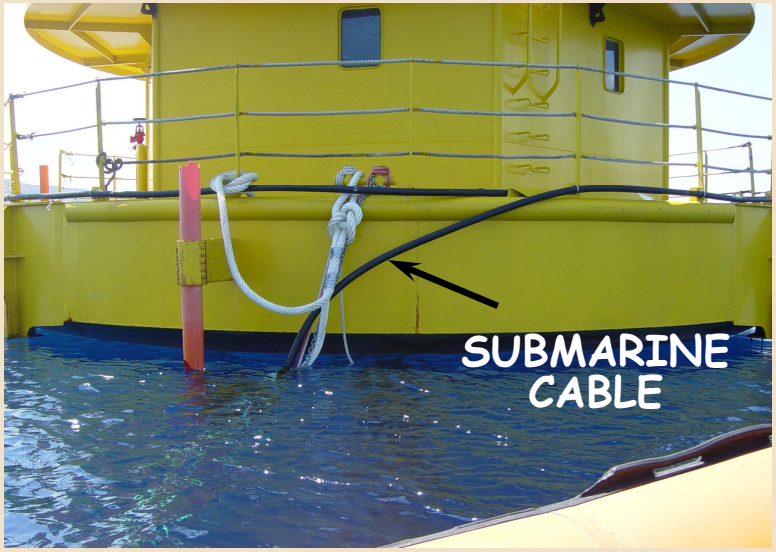

Working conditions and maintenance

- The Enermar plant is at sea since 2001 and it is one of the first real scale plant for the exploitation of marine currents ever launched.

- In six years it has been experienced the reliability of the several components of the plant and proved the design choices.
- No relevant problems in the main components reliability; the global behaviour of the plant, taking into account that it is a first prototype, can be considered satisfactory.

The main operation problems mainly regarded:

1. Blade – arm connection.
2. Thrust bearing.
3. Galvanic currents
4. Biofouling

INSCAN

The Italian Ship Model Basin

Blade – arm connection

- The weakest point of this part is the rubber blocks used to set the blade oscillation angle.
- Other problems are given by fishing lines and nets which have to be removed by scuba divers.

INSEAN

The Italian Ship Model Basin

Thrust bearing

- The original thrust bearing was made of Ertalon, material usually used for the propeller bearings.
- The Ertalon gave two kind of problems: water absorption and stress weaknesses in the radial direction.

		ERTALON	ORKOT
Rockwell hardness	R-M	87	100
Tensile stress	N/mm2	83	60
Compressive stress (Par.)	N/mm2	92	92
Compressive stress (Perp.)	N/mm2	92	347
Water absorption	%	6.5	>0,1
Max. service temperature	°C	120	130
Thermal expansion coeff.	(°K)	8,0 E-5	9,0 E-5

INSEAN

The Italian Ship Model Basin

Galvanic currents

The presence of carbon, having a very high electrolytic potential (similar to gold) generates strong galvanic currents in the steel structure and thus can cause corrosion problems if not correctly protected

INSEAN

The Italian Ship Model Basin

PONTE DI ARCHIMEDE NELLO STRETTO DI MESSINA S.p.A.

Biofouling

- The marine environment is very active from a biological point of view.
- To keep the turbine efficient it is necessary to send periodically a scuba diver to clean blades and arms.

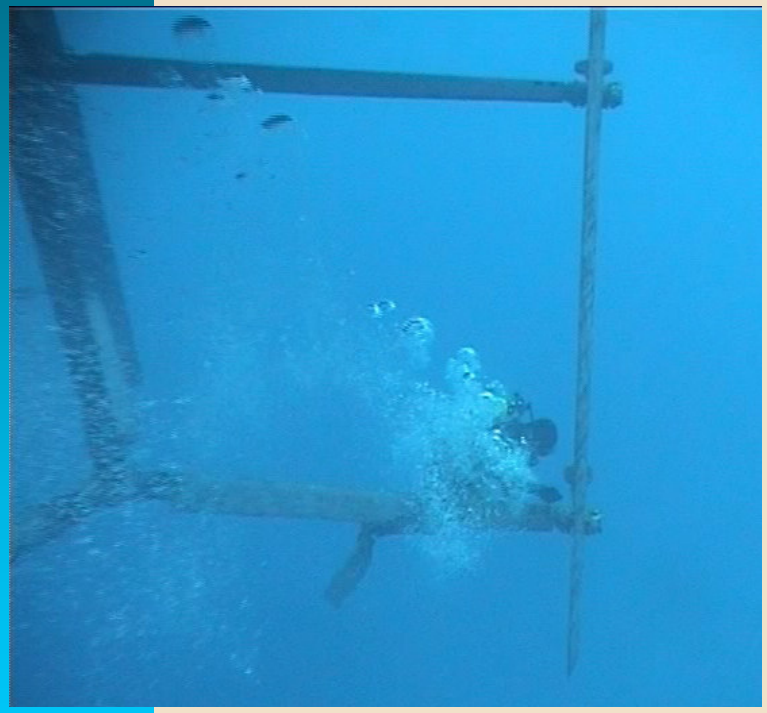

tidaltoday

The Italian Ship Model Basin

Conclusions and future steps (from the real operations side)

Future steps:

- Thanks to the experience of six years at sea through a financing from UNIDO (United Nations Industrial Developement Organization), three new prototypes are being designed and will be installed within 2008 in People's Republic of China (Zhoushan Archipelago), in Indonesia and in the Philippines.
- UNIDO has chosen the Kobold technology to give clean and environmentally friendly electricity to remote islands in South-East of Asia.

INSEAN

The Italian Ship Model Basin

Conclusions and future steps (from the research side)

- Kobold turbine: an innovative technology for marine current exploitation
- Experimental and numerical tools for the hydrodynamic analysis
- Research activity under progress at INSEAN

Aim: provide practical tools to assist the design of high-performance power generation plant (*marine current farms*) site-tailored

Future steps:

- further development and assessment of the turbine performance prediction code by BEM (blade-wake impact, high angle of attack, dynamic-stall, blade pitch control,viscous effects on loads model)
- define experimental activity specifically devoted to separately investigate turbine flow components, to provide data for CFD code validation and to investigate sea-keeping performances

The Italian Ship Model Basin

INSEAN RE-Search team &

Ponte di Archimede International SpA

Contacts:

G.Calcagno@insean.it

alberto.moroso@morosostarita.it

Tidal Energy Summit, November 28-29, 2007, London